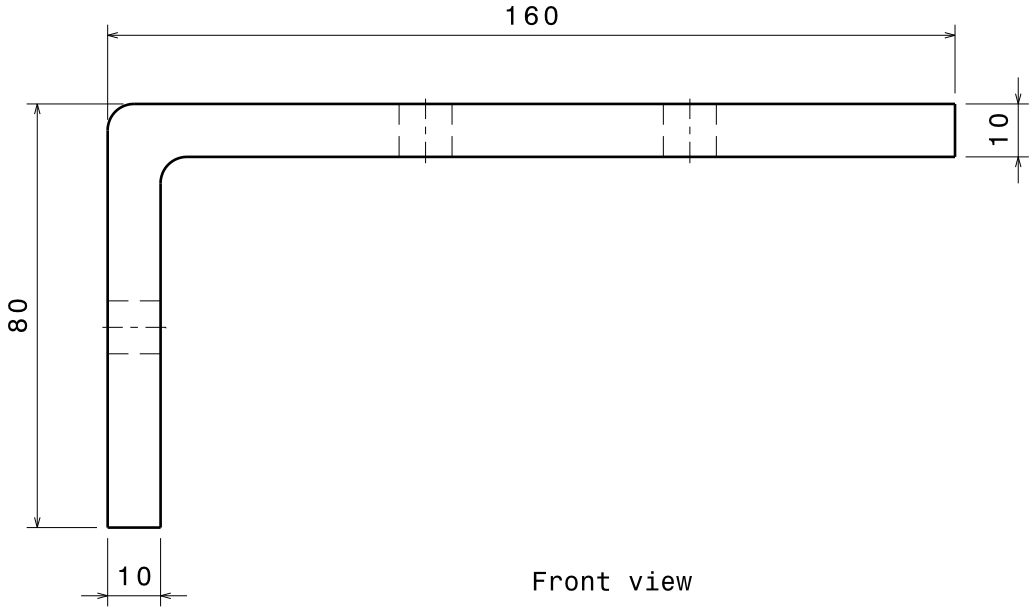

Front view

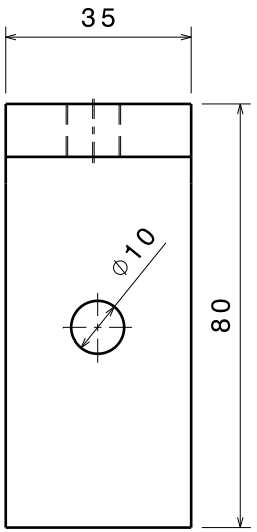

Right view

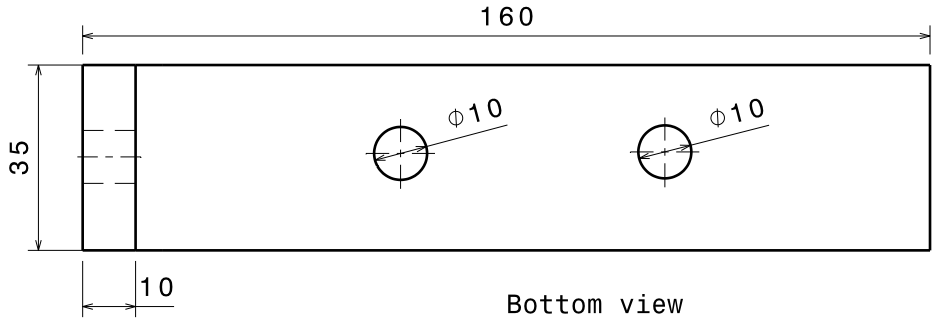

Bottom view

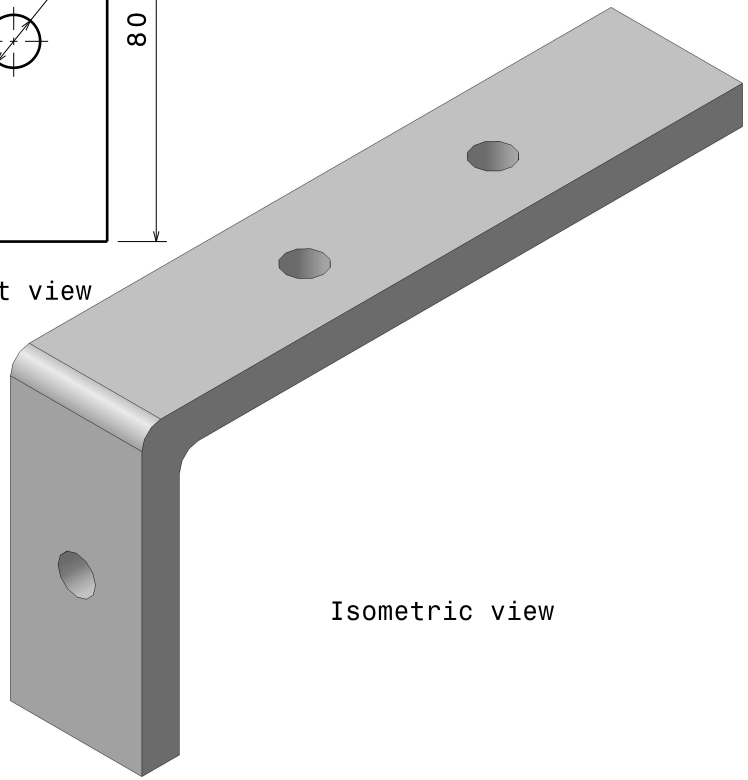

Isometric view

NOTE
All dimensions in mm

DRAWN BY: CLIVE KARIUKI DATE: 28-Nov-24	KenGen		
CHECKED BY: CLIVE KARIUKI DATE: 28-Nov-24			
SIZE A3	Coupling Guard L-Bracket		
SCALE 1:1	WEIGHT (kg)	DRAWING NUMBER NGWF/09/2024	SHEET 1/1

This drawing is the property of KenGen.